ELTON B.V.
DATA SHEET
ELLENMATIC SOUNDPROOF

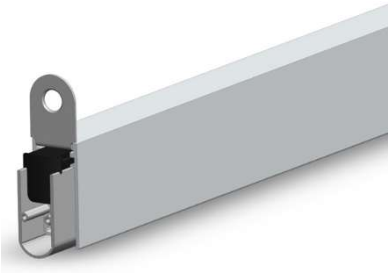

PRODUCT SPECIFICATIONS

Product group	Automatic drop seals (e.g. draught excluders) and accessories.
Intended use	Sealing of the gap at the bottom of doors made from wood (use on metal or glass doors possible in combination with the EM Elegance Cassette) with the objective to soundproof, airproof and/or lightproof a room, as well as to protect against fire and smoke.
Product attributes	- Noise reduction of Rs,w,0 51 dB - tested by IFT Rosenheim - Fire resistence of T30 – tested by Efectis - Fire resistance of T60 – tested by Efectis - Smoke protection – tested by DMT
Material	- Aluminium profile - Silicon seal
Product dimensions / groove size	Width 15 mm x height 30 mm
Gap	Min. 3 mm – max. 20 mm
Length	- Min. 300 mm – max. 1600 mm - For longer lengths the EM Soundproof OM is available - Customization possible
Standard lengths	628, 728, 828, 928, 1028, 1128, 1228 mm
Cut to length	Standard lengths max 150 mm
Activation	Single sided, at the hinge side
Mounting	- Under the door: use the included suspension plates - On the door: use the EM Elegance Cassette
Maintenance	See Declaration of Quality

ELTON
Elton B.V., 2e Energieweg 5,
Postbus 5, 9300 AA RODEN
Tel: +31 (0)50 502 11 99
Fax: +31 (0)50 501 47 72
Internet: www.elton.nl
E-mail: ellen@elton.nl
IBAN NL98 INGB 0670 2101 53
Swift address: INGB NL 2A
KvK Meppel 04022574
BTW NL005859189B01

DRAWINGS

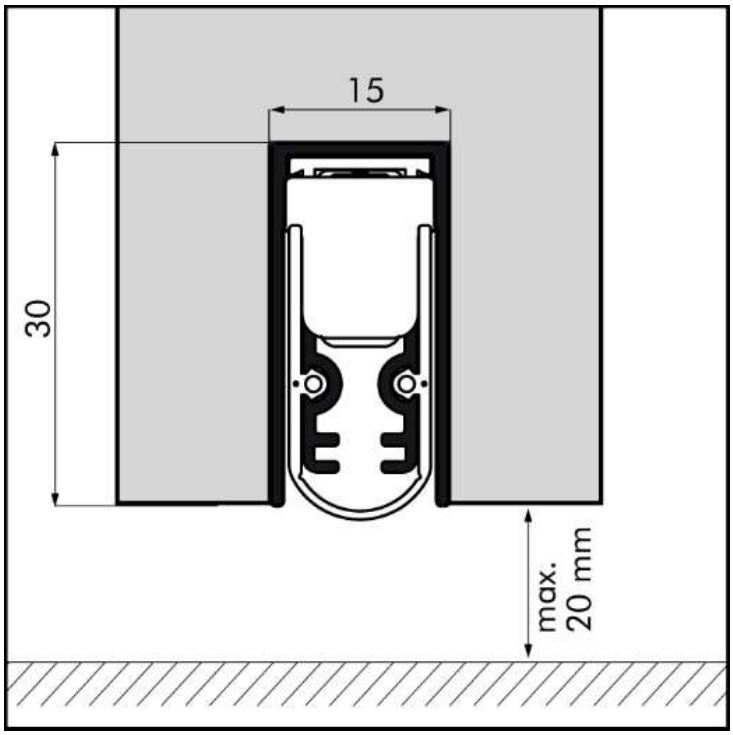

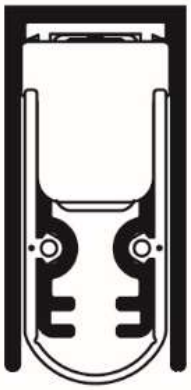

Elton B.V., 2e Energieweg 5,
Postbus 5, 9300 AA RODEN
Tel: +31 (0)50 502 11 99

Fax: +31 (0)50 501 47 72
Internet: www.elton.nl
E-mail: ellen@elton.nl

IBAN NL98 INGB 0670 2101 53
Swift address: INGB NL 2A

KvK Meppel 04022574
BTW NL005859189B01