MONTAGE HANDLEIDING

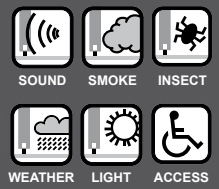

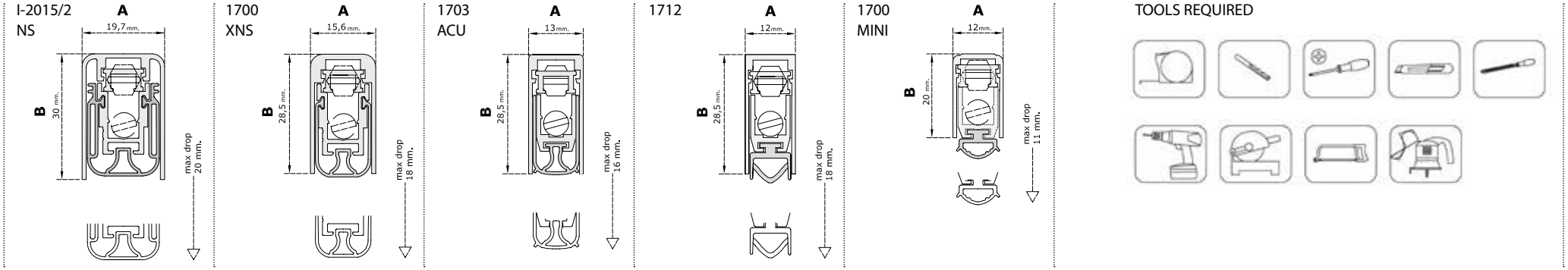

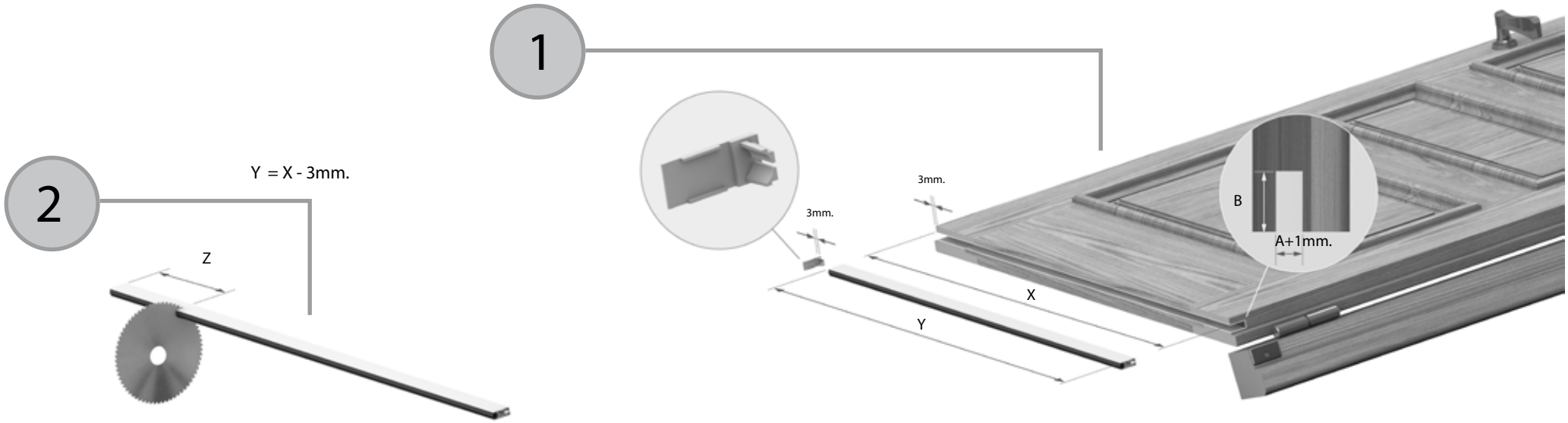

CUT DOWN SIZES									
STANDARD SIZES mm.	530	630	730	830	930	1030	1130	1230	1330
Z mm.	100	100	100	100	100	100	100	100	100

MONTAGE HANLEIDING

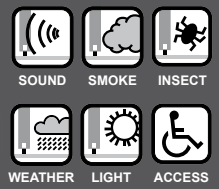

3

4

5

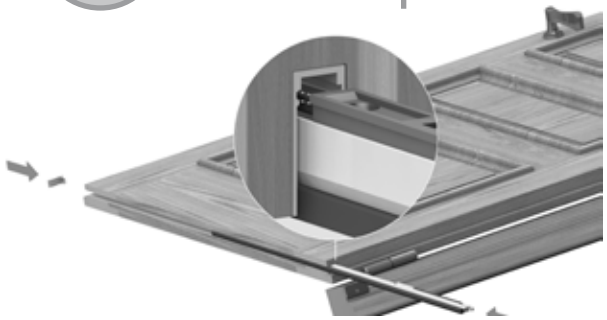
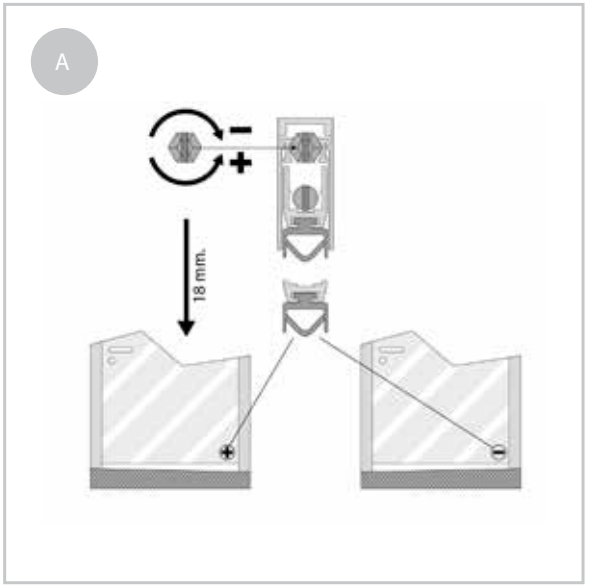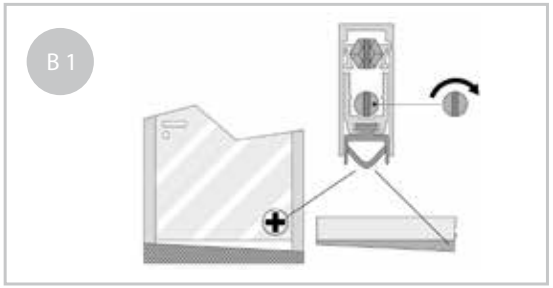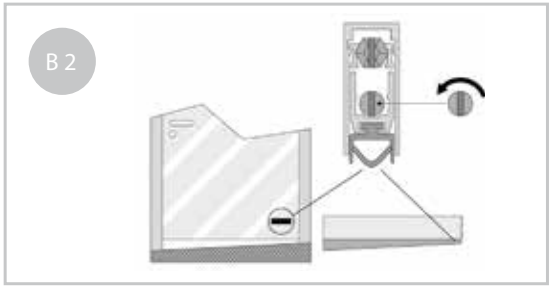
6